OPERATION AND MAINTENANCE MANUAL

No. E 540A

HO-V 352 () ()

Constant Speed Propeller

HO-V 352 () - S1

Constant Speed Propeller
with mechanical feathering

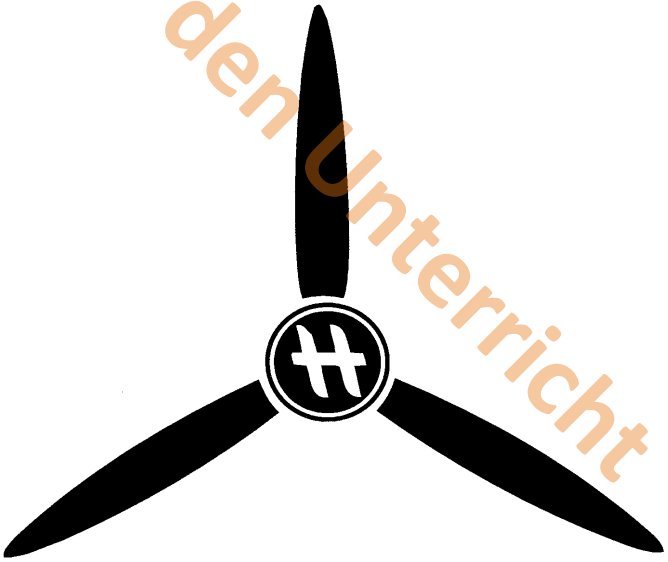

HOFFMANN GmbH & Co. KG
Küpferlingstraße 9
83022 Rosenheim
Tel.: ++49/(0)8031/1878-0
Fax: ++49/(0)8031/1878-78

Owner's Manual No. E540A
61-10-01

New Edition
Oct. 2002

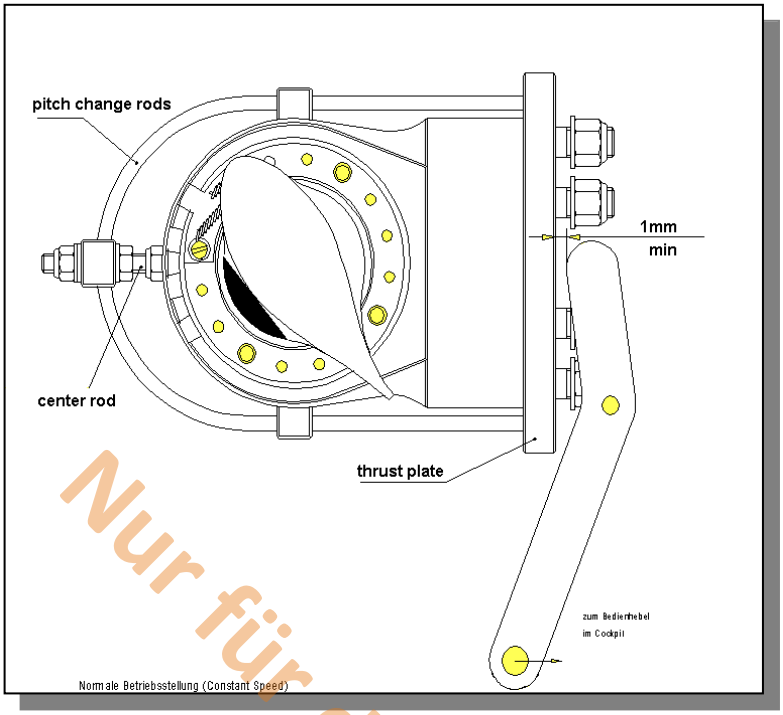

Fig. 5-1 HO-V352()() normal operating range

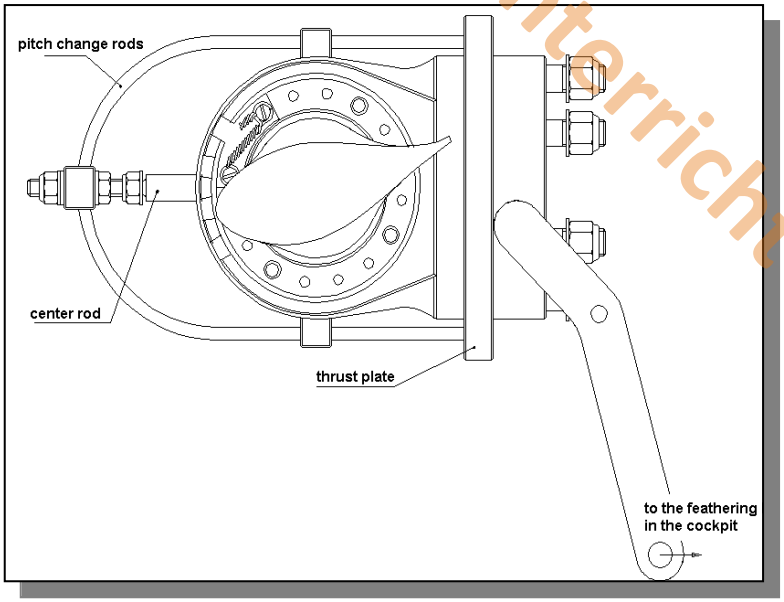

Fig. 5-2 HO-V352()() in feathering position

5.2.3 Model HO-V 352 ( )-S1

Uses oil pressure to increase pitch

The behaviour of this propeller in the normal operating range (constant speed range) is described in para. 5.2.1.
The maximum attainable pitch is the feathering position of the propeller blades. The feathering position will be attained by a mechanical device. (Fig. 5.1).

CAUTION

The change to the feathering position can be done only with the engine stopped or windmilling.

In order to change the propeller pitch to the feathering position an actuating system with two ball bearings has to be installed on the engine. When operating the feathering lever in the cockpit the two ball bearings contact the thrust plate of the propeller. The force of the lever acts against the force of a return spring. The centre rod is connected with the pitch change rods to the thrust plate. The blade angle for feathering is determined by the length of the connecting cable. The feathering lever in the cockpit will be locked. This keeps the propeller in the feathering position.
To return the propeller blade to the low pitch position the feathering lever has to be released. Through that a "windmillstart" of the engine is possible. The "windmillstart" is repeatable.
The gap between the ball bearings and the thrust plate with the propeller blades at the low pitch stop must be at least 1 mm (0.04 inch).

5.3 Propeller governing

5.3.1 On-Speed condition

In this condition, the forces acting on the engine-governor-propeller combination are in balance. The speed adjusting control lever has been set by the pilot to obtain the desired engine rpm. The propeller blades are at the correct pitch to absorb the power developed by the engine. The centrifugal force of the rotating flyweights exactly balances the force of the speeder spring. The pilot valve is positioned in the drive gear shaft so that the control ports from the oil pump and to the propeller pitch changing mechanism are covered. Pressured oil from the gear type pump circulates through the open governor relief valve back to the inlet side of the pump.

5.3.2 Over-speed

This condition occurs when the air speed and/or engine power is increased and the engine exceeds the speed for which the control lever is set. The force of the rotating flyweights is pulling outward while their increased centrifugal force overcomes the force of the speeder spring. The flyweight toes raise the pilot valve plunger, uncovering ports in the drive gear shaft that permit pressured oil to flow to the propeller pitch change mechanism. As the propeller blades increase pitch, the load on the engine is increased and engine rpm is reduced.

This, in turn, reduces the centrifugal force of the flyweights. The speeder spring returns the flyweights to a vertical position and the pilot valve plunger once more covers the ports in the drive gear shaft, blocking flow of pressured oil to the pitch change mechanism of the propeller. The system is in the On Speed Condition.

5.3.3 Under-speed

An under-speed condition occurs when the air speed and/or engine power is decreased and engine rpm drops below the speed for which the control lever is set. The decrease in the centrifugal force of the rotating flyweights causes them to pivot inward under the force of the speeder spring. The pilot valve plunger is forced downwards, uncovering the ports in the drive gear shaft, allowing oil to flow from the pitch change mechanism of the propeller to the engine sump. This permits the natural twisting moment of the blades to decrease propeller pitch. This reduces the load on the engine, thereby the engine speed increases and the centrifugal force develops by the rotating flyweights. As the flyweights return to the vertical position, the flyweight toes lift the pilot valve plunger to cover the control ports. The system is in the On Speed Condition.

5.3.4 Governor model "oil pressure to decrease pitch" works similarly with following exceptions:

- Supply of pressured oil at under-speed condition
- Drain of oil at over-speed condition

5.4 Nearly all propeller systems for acrobatic flight use governor model "oil pressure to decrease pitch" to prevent over-speed of the propeller if the oil supply from the engine is interrupted for a short time.

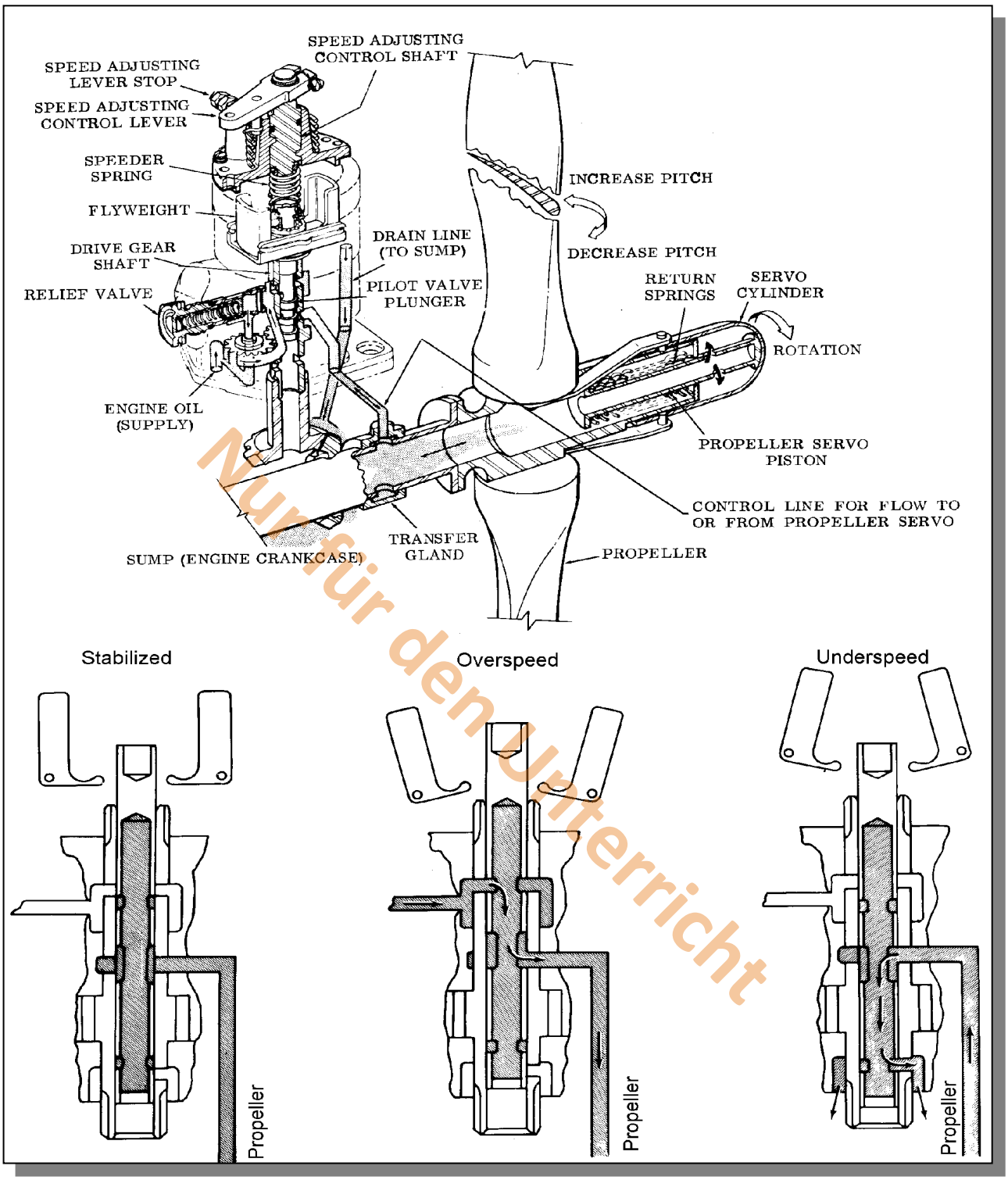

Fig. 5–1 Governor function "Oil pressure to increase pitch"

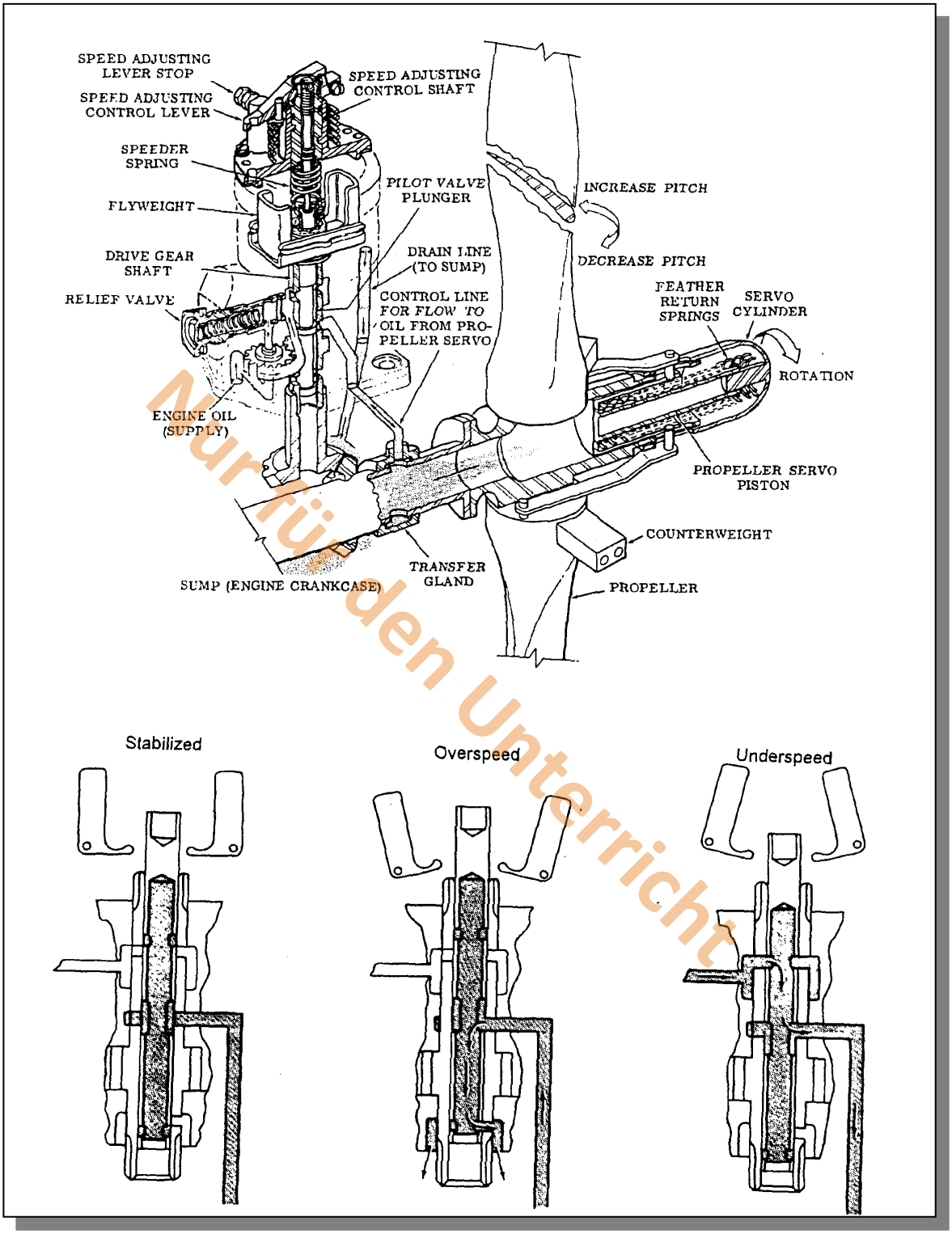

Fig. 5-4 Governor function "Oil pressure to decrease pitch"